DART AEROSPACE

Dart Hawkesbury
1270 Aberdeen St
Hawkesbury, ON
K6A 1K7
Canada

Tel (613) 632-5200

D4822-2

Job Sheet 167750

169523

Part No: D4822-2 **Job Qty:** 8 ea ~~5~~ 3X.

Part Name: Upper Right Deflector

Part Weight: 0 lbs **Status:** Scheduled **Priority:** Medium

Job Created: 11/6/17 **Job Tracking No:**

Due Date: 12/8/17 **Created By:** Chantal Lavoie

Type: Stock **Description:**

Ship Via: Dwg REV.C

Bill of Materials

Job Routing

Op No	Operation	Qty	Start Date	Due Date	Standard Setup hrs	Standard Run Hrs	Workcenter/Supplier Workcenter / Supplier	Lead Time	Sign-off
90	~~Start up Operation~~	8 Ea		12/7/17	0.00	0.00	Start Up Machining		
100	**Bandsaw**	8 pcs		12/8/17	0.00	1.95	Bandsaw1		
110	**Purchasing**	8 pcs		12/8/17	0.00	0.00	Purchasing		
115	**Packaging**	8 pcs		12/8/17	0.00	0.00	Packaging2		DAS
117	**QC**	8 pcs		12/8/17	0.00	0.00	QC6		38
120	**Outsource**	8 pcs		12/8/17			ATG001-VC Outsource5		ATG 11/03/01
122	**QC**	8 pcs		12/8/17	0.00	0.00	~~QC14~~		DAS
140	**QC**	8 pcs		12/8/17	0.00	0.00	QC5		38 11 MAR 0 2 2018
170	**Packaging**	8 pcs		12/8/17	0.00	0.00	Packaging3 eckart		DAS 9-89
190	**QC21-SA**	8 Ea		12/8/17	0.00	0.00	QC21		21 MAR 0 5 2018

Part Op Descriptions:
100 - CUT AT 32.00" LONG
110 - ISSUE P/0: 035259 POSSIBLE SUPPLIER:WEJAY ***1 BLANK MAKES 2 PARTS**** Certificate of conformaty required NOV 0 6 2017
115 - Receive & Inspect for Damage & Mat'l Certs
117 - QC6- All purchased or subcontracted products
120 - HARD ANODIZE IAW MIL-A-8625 TYPE 3 COLOUR BLACK PRIME AS PER DWG NOTE #2
122 - QC14- Inspect Spray Paint PO 035921 JAN 3 1 2018
140 - QC5- Inspect part completeness to step on W/O
170 - Identify as per dwg & Stock Location:_____
190 - QC21- Final Inspection - Work Order Release

Job Allocations

Operation	Component Part	Required	Inventory	Allocated	Std Qty
90-Start up Operation FM133930	M7075T6514.000X4.000	135 ~~47~~	13	0	0
110-Purchasing	D4822-2P B	8	0	0	0

Part Specifications

Specifications could not be found.

DART
AEROSPACE
S030129
C
Upper Right Deflector
PART NO: D4822-2
Revision:
Operation:
Change No:
Purchasing
Mfg Date: 01/08/18
Job No: 167750
Dart Aerospace Ltd.
1270 Aberdeen Street
Hawkesbury, ON K6A 1K7
CANADA
TEL.: 1 613 632-5200
Email: sales@dartaero.com
www.dartaerospace.com

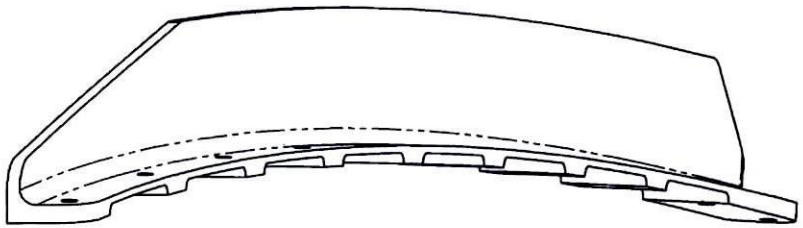

D4822-1 UPPER DEFLECTOR LH

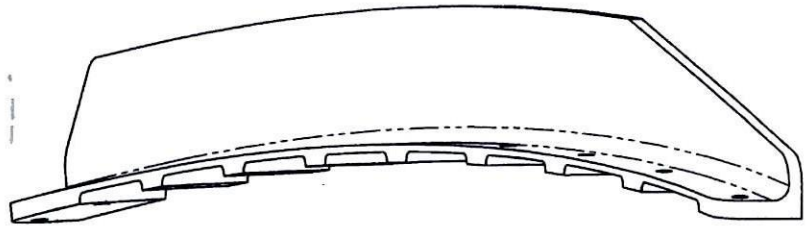

D4822-2 UPPER DEFLECTOR RH

RELEASED
2014 FEB 25
ECN 14-516

REV.	DESCRIPTION	BY	DATE
C	DRAWING REVISED TO NEW CUSTOMER CAD DATA, RIVET HOLES ADDED	DB	14.02.04
B	CORRECTED WEIGHT	DW	13.09.24
A	NEW RELEASE	DB	13.05.23

APPROVED

DESIGN	DB
DRAWN	VS
CHECKED	DC
MFG. APPR.	EPDMA
APPROVED	HS
DE APPR.	DS
DATE	14.02.04

DART AEROSPACE LTD
HAWKESBURY, ONTARIO, CANADA

DRAWING NO. D4822 REV. C
SHEET 1 OF 3

TITLE UPPER DEFLECTOR SCALE NTS

COPYRIGHT © 2013 BY DART AEROSPACE LTD
THIS DOCUMENT IS PRIVATE AND CONFIDENTIAL, AND IS SUPPLIED ON THE EXPRESS CONDITION THAT IT IS NOT TO BE USED FOR ANY PURPOSE OR COPIED OR COMMUNICATED TO ANY OTHER PERSON WITHOUT WRITTEN PERMISSION FROM DART AEROSPACE LTD

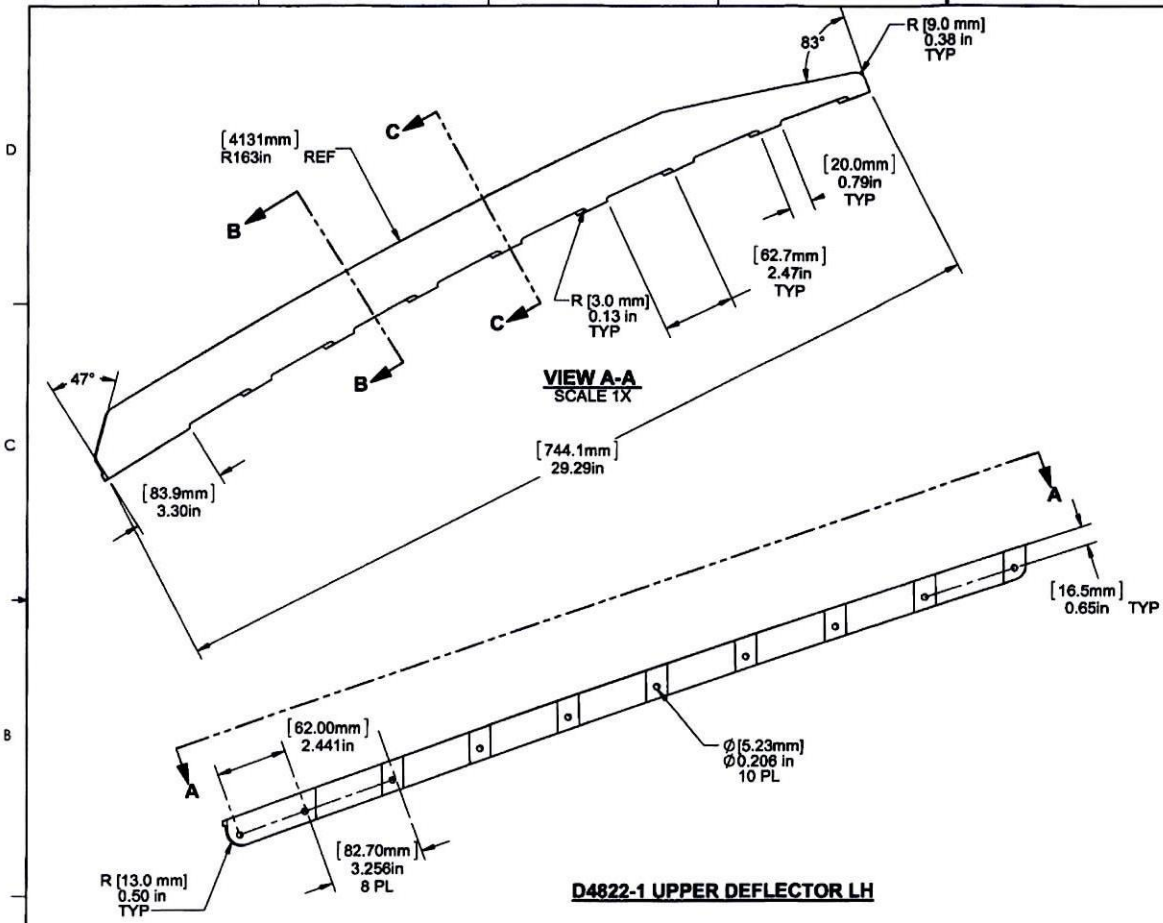

VIEW A-A
SCALE 1X

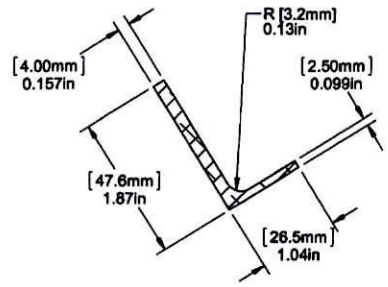

SECTION B-B
SCALE 1.5X

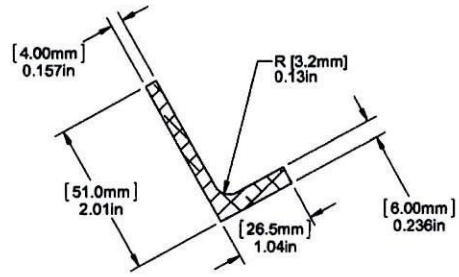

SECTION C-C
SCALE 1.5X

D4822-1 UPPER DEFLECTOR LH

RELEASED
2014 FEB 25

NOTES:
1) MATERIAL: 7075-T6 (OR T651/T6510/T6511/T62) ALUMINUM BAR
PER AMS-QQ-A-225/9 (OR AMS 4122/4123/4186/4187) OR
PER AMS-QQ-A-200/11 (REF DART SPEC. M7075T6B)
2) FINISH: HARD ANODIZE IAW MIL-A-8625F TYPE III, CLASS 2, COLOR BLACK,
PRIME IAW MIL-P-23377J TYPE I CLASS N; 1-2 MIL MAX, AS PER QSI 005.
3) TOLERANCES: PER DART QSI 018 UNLESS OTHERWISE NOTED
4) UNITS: INCHES UNLESS OTHERWISE NOTED
5) BREAK SHARP EDGES: 0.005 TO 0.010 MAX
6) IDENTIFICATION: IDENTIFY WITH DART P/N "D4822-1", AGUSTA WESTLAND P/N "TBD", REVISION, BATCH NUMBER AND MANUFACTURE DATE, USING AN X-TENSION STAMP, AS PER QSI 044 METHOD 6.2
7) WEIGHT: 1.22 LBS (0.6 KG)
8) PART DIMENSIONS CONTROLLED BY CAD MODEL FILE: D4822-1-c.IGES (OR D4822-1-c.STEP)

APPROVED

DESIGN	DB	DART AEROSPACE LTD
DRAWN	VS	HAWKESBURY, ONTARIO, CANADA
CHECKED	DC	DRAWING NO. D4822 REV. C
MFG. APPR.	EPDMA	SHEET 2 OF 3
APPROVED	HS	TITLE UPPER DEFLECTOR
DE APPR.	DS	SCALE NTS
DATE	14.02.04	

COPYRIGHT © 2013 BY DART AEROSPACE LTD
THIS DOCUMENT IS PRIVATE AND CONFIDENTIAL AND IS SUPPLIED ON THE EXPRESS CONDITION THAT IT IS NOT TO BE USED FOR ANY PURPOSE OR COPIED OR COMMUNICATED TO ANY OTHER PERSON WITHOUT WRITTEN PERMISSION FROM DART AEROSPACE LTD.

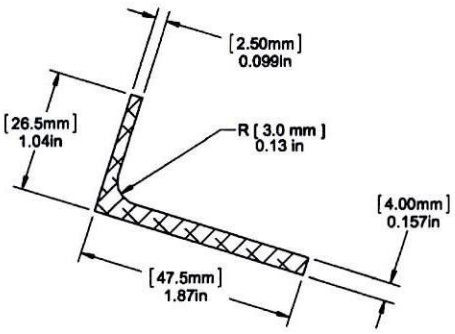

SECTION E-E
SCALE 2X

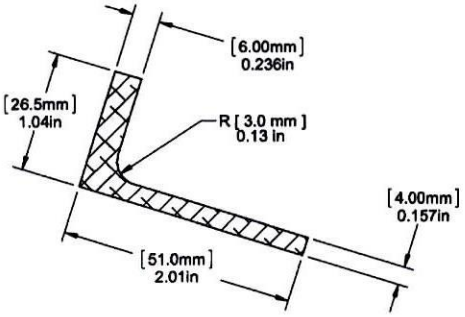

SECTION F-F
SCALE 2X

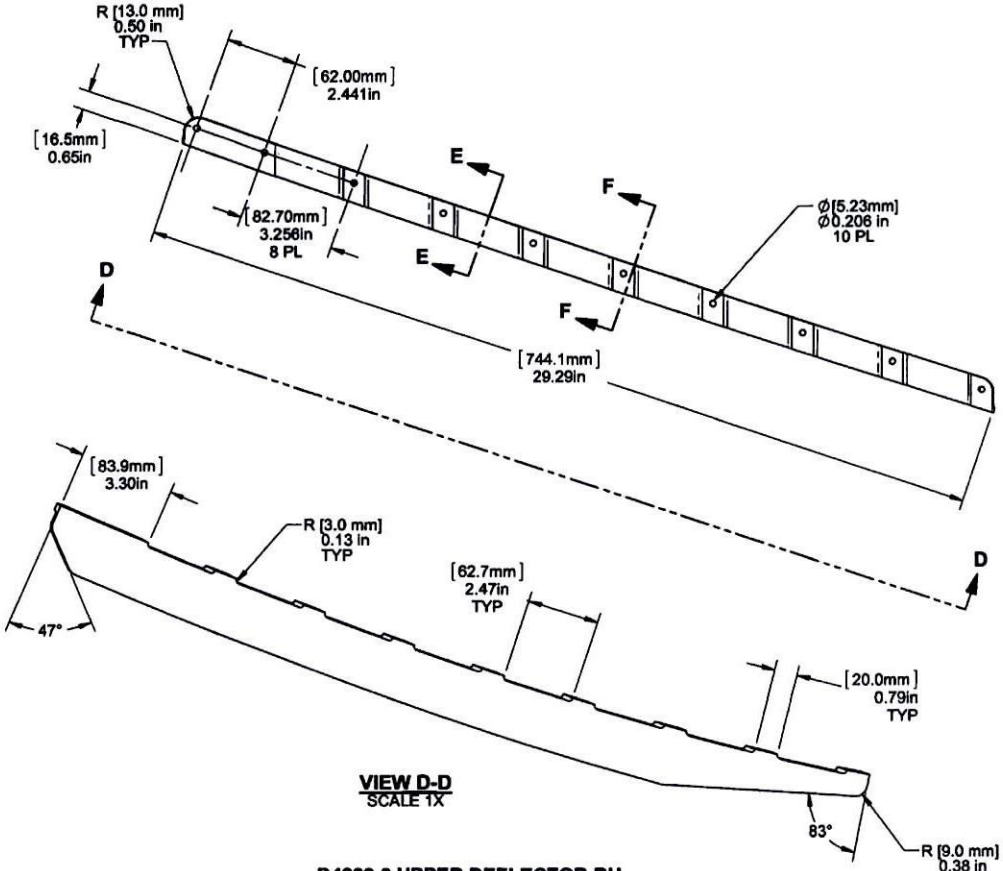

VIEW D-D
SCALE 1X

D4822-2 UPPER DEFLECTOR RH

RELEASED
2014 FEB 25

NOTES:
1) MATERIAL: 7075-T6 (OR T651/T6510/T6511/T62) ALUMINUM BAR
PER AMS-QQ-A-225/9 (OR AMS 4122/4123/4186/4187) OR
PER AMS-QQ-A-200/11 (REF DART SPEC. M7075T6B)
2) FINISH: HARD ANODIZE IAW MIL-A-8625F TYPE III, CLASS 2, COLOR BLACK,
PRIME IAW MIL-P-23377J TYPE I CLASS N; 1-2 MIL MAX, AS PER QSI 005.
3) TOLERANCES: PER DART QSI 018 UNLESS OTHERWISE NOTED
4) UNITS: INCHES UNLESS OTHERWISE NOTED
5) BREAK SHARP EDGES: 0.005 TO 0.010 MAX
6) IDENTIFICATION: IDENTIFY WITH DART P/N "D4822-2", AGUSTA WESTLAND P/N "TBD", REVISION, BATCH NUMBER AND MANUFACTURE DATE,
USING AN X-TENSION STAMP, AS PER QSI 044 METHOD 6.2
7) WEIGHT: 1.22 LBS (0.6 KG)
8) PART DIMENSIONS CONTROLLED BY CAD MODEL FILE: D4822-2-c.IGES (D4822-2-c.STEP)

APPROVED

DESIGN	DB	DART AEROSPACE LTD
DRAWN	VS	HAWKESBURY, ONTARIO, CANADA
CHECKED	DC	DRAWING NO. D4822 REV. C
MFG. APPR.	EPDMA	SHEET 3 OF 3
APPROVED	HS	TITLE UPPER DEFLECTOR SCALE NTS
DE APPR.	DS	
DATE	14.02.04	

COPYRIGHT © 2013 BY DART AEROSPACE LTD
THIS DOCUMENT IS PRIVATE AND CONFIDENTIAL AND IS SUPPLIED ON THE EXPRESS CONDITION THAT IT IS NOT TO BE USED FOR ANY PURPOSE OR COPIED OR COMMUNICATED TO ANY OTHER PERSON WITHOUT WRITTEN PERMISSION FROM DART AEROSPACE LTD.

DART AEROSPACE

Dart Hawkesbury
1270 Aberdeen St
Hawkesbury, ON
K6A 1K7
Canada

Tel (613) 632-5200

PURCHASE ORDER
PO038259

Supplier: WEJ001-VC
Wejay Machine Products Co. Ltd
600 O'Connor Drive
Kingston
ON
K7P 1N3 Canada
Phone: 613-384-1662
Fax: 613-384-2997

Ship To: 1270 Aberdeen Street
Hawkesbury
ON
K6A 1K7 Canada
Phone: 613-632-5200

PO No:	PO038259
PO Date:	11/6/17
Due Date:	11/20/17
Purchase Order Revision:	
Revision Date:	
Ship-To Contact:	Lavoie, ChantalPhone: clavoie@dartaero.com
Via:	Ground
Pymt Terms:	Net 30
Freight Terms:	
Special Comments:	

Items

Line Item	Part	Rev	Supplier Part No	Item No	Description	Item Tax	Status	Due Date	Order Quantity	Received Quantity	Balance	Unit Price (CAD)	Extended Price
1	D4970-3P	-			Windshield Deflector - Upper As per Dwg D4970 Rev. C		Firmed	11/20/17	2 Ea	0 Ea	2 Ea	$1,095.00/Ea	$2,190.00
Line Item Note	job# 167748												
2	D4822-1P	-			Upper Deflector, LH As per Dwg D4822 Rev. C		Firmed	11/20/17	10 pcs	0 pcs	10 pcs	$1,057.00/pcs	$10,570.00
Line Item Note	JOB# 167749												
3	D4822-2P	-			Upper Right Deflector As per Dwg D4822 Rev. C		Firmed	11/20/17	8 pcs	0 pcs	8 pcs	$1,057.00/pcs	$8,456.00
Line Item Note	job # 167750												
4	D4821-1P	-			Windshield Deflector As per Dwg D4821 Rev. B		Firmed	11/20/17	8 pcs	0 pcs	8 pcs	$1,095.00/pcs	$8,760.00
Line Item Note	job# 16751												

Grand Total: $29,976.00

Order Notes

Terms & Condition of Purchasing(Suppliers) and Procurement Quality Clauses are an integral part of our AS9100 requirements. To learn in detail, please visit www.dartaerospace.com for further explanation.

Procurement Quality Clauses
A005 RIGHT OF ENTRY
A007 FIRST ARTICLE INSPECTION (FAI) BY SELLER, (DOCUMENTATION MAINTAINED BY SUPPLIER)

Packing Slip 38873

Wejay
MACHINE PRODUCTS CO. LTD.

600 O'CONNOR DRIVE, KINGSTON, ONTARIO K7P 1N
TEL: 613-384-1662 FAX: 613-384-299
www.wejay.cor

SOLD TO
Dart Aerospace
1270 Aberdeen Street
Hawkesbury ON K6A 1K7

SHIP TO
Dart Aerospace
1270 Aberdeen Street
Hawkesbury ON K6A 1K

INVOICE DATE	YOUR ORDER NO.	DATE ORDERED	SHIPPED VIA
	038259	11/07/17	Best way

CUSTOMER CODE	PROV. LIC. NO.	Extra	Exempt	TERMS
DART		☐	☐	

QUANTITY ORDERED	B.O.	QUANTITY SHIPPED	DESCRIPTION	UNIT PRICE	AMOUNT
2	1	1	Windshield deflector - upper as per drawing D4970, Rev. C Part number: D4970-3P Job Number: 167748		
10	10	0	Upper deflector, LH as per drawing D4822, Rev. C Part number: D4822-1P Job number: 167749		
8	5	3	Upper right deflector as per drawing D4822, Rev. C Parrt number: D4822-2P Job number: 167750		
4	0	8	Windshield deflector as per drawing D4821, Rev. B Part number: D4821-1P Job number: 167751		

SPA-1227.

RELEASE NOTE

I certify that the items listed hereon have been inspected and tested and conform to all specifications and requirements in the contract or purchase order.

WMP 03

Inspection Supervisor

Required by: November 20, 2017

H.S.T.

ORDER: COMPLETE ☐ PARTIAL ☐

TOTAL

NO GOODS RETURNED WIT
PRIOR AUTHORIZATION

RECEIVED BY _____

1.5% PER MONTH (18% PER ANNUM)
CHARGED ON OVERDUE ACCOUNTS

Wejay
MACHINE PRODUCTS CO. LTD.

600 O'CONNOR DRIVE, KINGSTON, ONTARIO K7P 1N3 PHONE: (613) 384-1662 FAX: (613) 384-2997

CERTIFICATE OF COMPLIANCE

CUSTOMER: Dart Aerospace	**DATE:** Dec. 12, 2017
	P.O.# **PO38259 item 3**
	WEJAY JOB# 38873

I hereby certify that the following material has been inspected/tested and conforms to the requirements and specifications as stated in your contract and as noted below.

PART NO.	QTY.	PROCESS (ES)	SPECIFICATION / REV
D4822-2P 'Upper Right Hand Deflector' Job Number: 167750	3	Machined complete per drawing req'ts.	D4822 / rev. C

Note: 1) Material supplied by Dart Aerospace: for qty 3 parts ref. Dart Batch# M133930. FMB3930
2) 1st Article Inspection Report attached.

Records of Inspection/Test will be retained for 5 years minimum.

Sincerely,

WMP 03

Clifford Smith
Authorized Q.A. Signatory

First Article Inspection Report

(Report all dimensions and features required by drawing)

Customer : DART AEROSPACE

Customer P.O. No.: 38259 ITEM 3

Wejay Job No.: 38873

Part Description: UPPER R.H. DEFLECTOR

Part Serial No.: 001

Manufacturing Production Order Operation No.: 40

Drawing Number (Including Revision): D4822-2P REV. C

Drawing Balloon Item (When attaching drawing to itemize features)	Dimension Required	Actual Dimension recorded
SEE ATTACHED BALLOON	DRAWING AND INSPECTION	REPORT
NOTE: 3 PARTS (DART MAT'L BATCH#M133930) FROM WEJAY STOCK		
MFD UNDER DART	P.O.#30870, JAN 29/16,	

Equipment Used: _____

☑ **Accepted** ☐ **Not Accepted** **NCR (If applicable)** _____

Reviewed by:

Production: _____ **Date:** _____

Quality Control: Cliff for Curtis **Date:** DEC 12, 2017

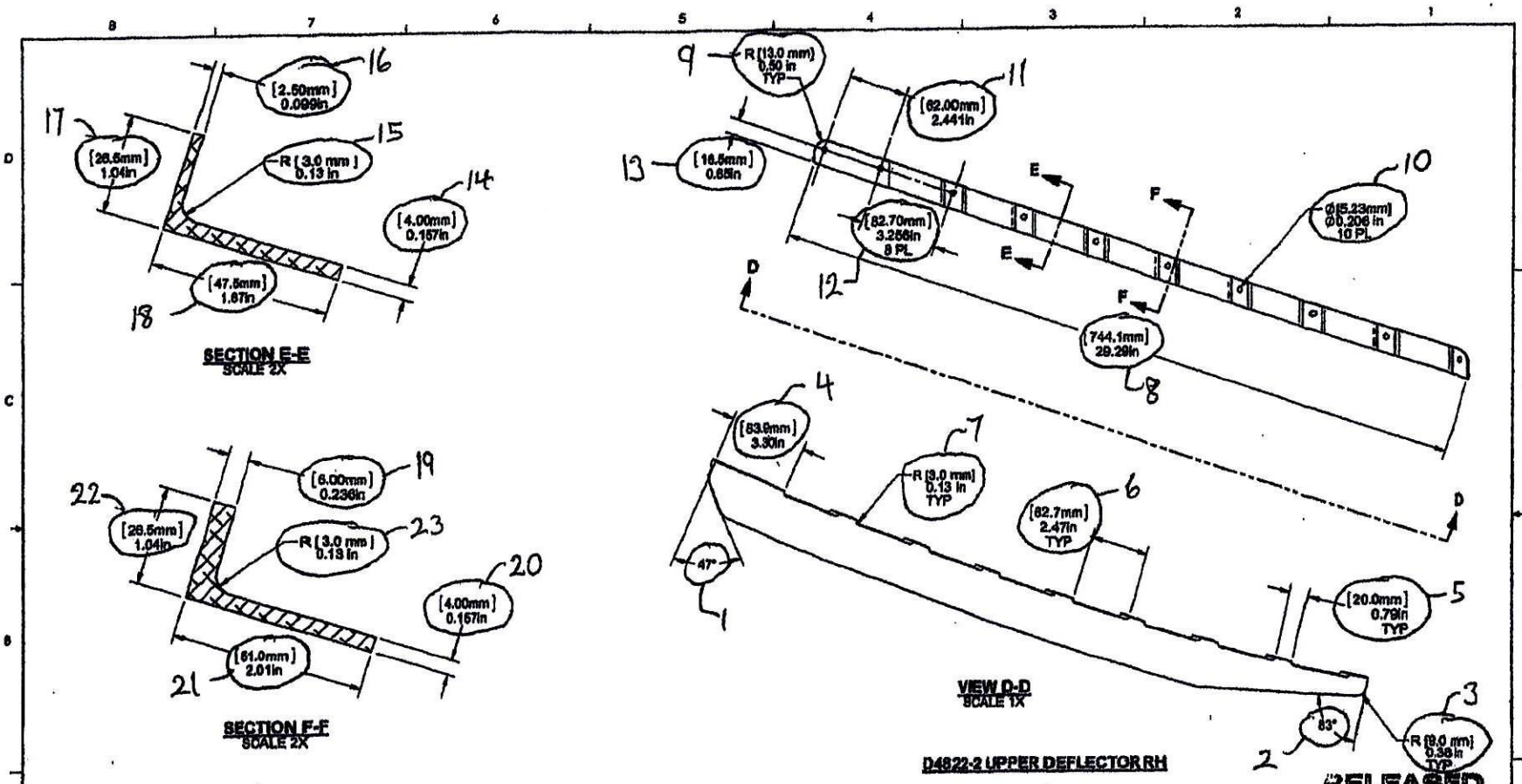

D4822-2 UPPER DEFLECTOR RH

RELEASED
2014 FEB 25

NOTES:
1) MATERIAL: 7075-T6 (OR T651/T6510/T6511/T62) ALUMINUM BAR
PER AMS-QQ-A-225/9 (OR AMS 4122/4123/4186/4187) OR
PER AMS-QQ-A-200/11 (REF DART SPEC. M7075T62)
2) FINISH: HARD ANODIZE IAW MIL-A-8625F TYPE III, CLASS 2, COLOR BLACK.
PRIME IAW MIL-P-23377J TYPE I CLASS N; 1-2 MIL MAX, AS PER QSI 005.
3) TOLERANCES: PER DART QSI 016 UNLESS OTHERWISE NOTED
4) UNITS: INCHES UNLESS OTHERWISE NOTED
24 5) BREAK SHARP EDGES: 0.005 TO 0.010 MAX
6) IDENTIFICATION: IDENTIFY WITH DART P/N "D4822-2", AGUSTA WESTLAND P/N "TBD", REVISION, BATCH NUMBER AND MANUFACTURE DATE, USING AN X-TENSION STAMP, AS PER QSI 044 METHOD 6.2
25 7) WEIGHT: 1.22 LBS (0.6 KG)
8) PART DIMENSIONS CONTROLLED BY CAD MODEL FILE: D4822-2-c.IGES (D4822-2-c.STEP)

APPROVED

DESIGN	DB	DART AEROSPACE LTD
DRAWN	VB	HAWKESBURY, ONTARIO, CANADA
CHECKED	DC	DRAWING NO. D4822 REV. C
MFG. APPR.	EPDMA	SHEET 3 OF 3
APPROVED	HS	TITLE UPPER DEFLECTOR SCALE NTS
DE APPR.	DS	
DATE	14.02.04	

COPYRIGHT © 2013 BY DART AEROSPACE LTD
THIS DOCUMENT AT REMOTE AND CONFIDENTIAL AND IS SUPPLIED ON THE EXPRESS CONDITION THAT IT IS NOT TO BE USED FOR ANY PURPOSE OR DISCLOSED TO ANY OTHER PERSON WITHOUT THE WRITTEN PERMISSION OF DART AEROSPACE LTD.

Wejay
MACHINE PRODUCTS CO. LTD.

600 O'CONNOR DRIVE
KINGSTON, ONTARIO
K7P 1N3

INSPECTION / TEST REPORT

JOB No. 38873
37749 REF.
PAGE: 1 of 1

CUSTOMER: Dart Aerospace
CUST. P.O.# PO 30870 REF. -NEW - P.O.#38259 ITEM 3
PART No. D4822-2 | DESCRIPTION: Deflector Right Hand
DWG No. D4822 | REV. C | E.C.O. --
MATERIAL: | INSPECTOR:

QUANTITY REC'D:	ACCEPT:	REJECT:	N.C.R.#	DATE:
1	1	—	—	JAN 29/18

INSTRUCTIONS, COMMENTS: Standard Tolerances per DART QSI 018 unless otherwise noted
— 1ST ARTICLE INSPECTION — DEC12/17

ITEM REF. No.	CHARACTERISTIC (DIMS IN mm)	DETAILS	TOLERANCE	DWG SHT/ZONE	RESULT	QTY. INSP.	COMMENTS (ACC. REJ. REW. NMR #)
1	47°	View D-D	±.5°	3/B5	46.5°	1	Acc.
2	83°		±.5°	3/B2	82.5°	1	"
3	R 0.38" typ.		±.03	3/B1	R.38 TYP.	1	"
4	3.30"		±.03	3/C5	3.308	1	"
5	0.79" typ.		±.03	3/B1	.794/.805	1	"
6	2.47		±.03	3/B3	2.457/2.460	1	"
7	R 0.13 typ.		±.03	3/C4	R.125 TYP.	1	"
8	29.29"		±.03	3/C3	29.315	1	"
9	R0.50" typ		±.03	3/D5	R.500 TYP.	1	"
10	Ø0.206 hole thru	10 pl.	+.005/-.001	3/D1	.206Ø TYP.	1	"
11	2.441"		±.010	3/D4	2.442	1	"
12	3.256" typ.	8 pl.	±.010	3/D4	3.255/3.257	1	"
13	0.65" typ.	10 pl.	±.03	3/D5	.648/.652	1	"
14	0.157"	Section E-E	±.01	3/D6	.1595/.161	1	"
15	R0.13" typ. — .197" RAD ON E-MODEL		±.03	3/D7	R.190 TYP.	1	"
16	.099"		±.01	3/D7	.097/.107	1	"
17	1.04"		±.03	3/D8	1.045/1.044	1	"
18	1.87"		±.03	3/C7	1.869/1.874	1	"
19	0.236"	Section F-F	±.01	3/C7	.233/.244	1	"
20	0.157"		±.01	3/B6	.1595/.161	1	"
21	2.01"		±.03	3/B7	2.003/2.010	1	"
22	1.04"		±.03	3/B8	1.045/1.044	1	"
23	R0.13" — .197" RAD ON E-MODEL		±.10	3/B7	R.190 TYP.	1	"
24	Deburring	Per note 5	.005-.010	3/A8	O.K.	1	"
25	Identification	Per note 6		3/A8	N/A	1	"

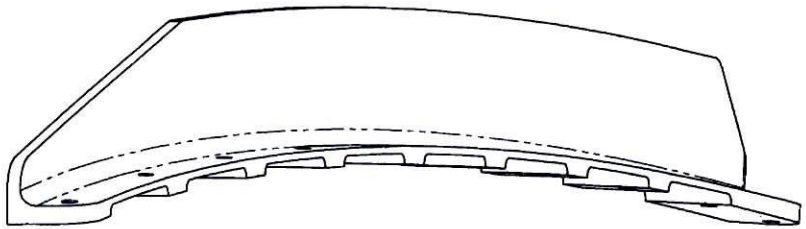

D4822-1 UPPER DEFLECTOR LH

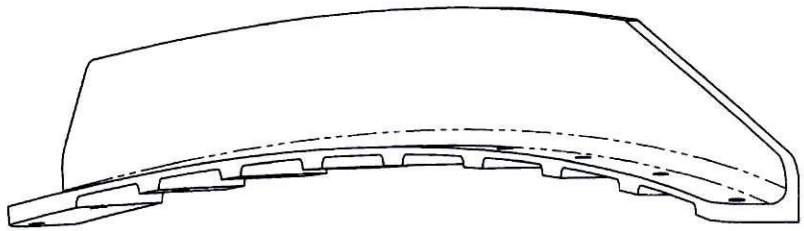

D4822-2 UPPER DEFLECTOR RH

RELEASED
2014 FEB 25
ECN 19-516

REV.	DESCRIPTION	BY	DATE
C	DRAWING REVISED TO NEW CUSTOMER CAD DATA, RIVET HOLES ADDED	DB	14.02.04
B	CORRECTED WEIGHT	DW	13.09.24
A	NEW RELEASE	DB	13.05.23

APPROVED

DESIGN	DB
DRAWN	VS
CHECKED	DC
MFG. APPR.	EPDMA
APPROVED	HS
DE APPR.	DS
DATE	14.02.04

DART AEROSPACE LTD
HAWKESBURY, ONTARIO, CANADA

DRAWING NO. D4822 REV. C
SHEET 1 OF 3

TITLE: UPPER DEFLECTOR
SCALE: NTS

COPYRIGHT © 2013 BY DART AEROSPACE LTD
THIS DOCUMENT IS PRIVATE AND CONFIDENTIAL AND IS SUPPLIED ON THE EXPRESS CONDITION THAT IT IS NOT TO BE USED FOR ANY PURPOSE OR COPIED OR COMMUNICATED TO ANY OTHER PERSON WITHOUT WRITTEN PERMISSION FROM DART AEROSPACE LTD.

DQA: _____ Date: _____

WORK ORDER NON-CONFORMANCE / UPDATE

DART AEROSPACE

QA Closed: Date: Work Order update only ☐

Work Order: _____

Part No. _____

NCR No.

DISPOSITION

Rework	☐
Scrap	☐
Use-as-is	☐
Suspected Unapproved	☐

AGAINST DEPARTMENT/PROCESS

Skid-tube	☐	Cross tube	☐	Water Jet	☐
Machining	☐	Small Fab	☐	Prod. Eng. Coor.	☐
Thermoforming	☐	Finishing	☐	Rec/Store/Packaging	☐
Large Fab	☐	Composite	☐	Supplier	☐
Engineering	☐				
Quality	☐				
Other	☐				

Date :

Step #:

QTY Effective :

MRB (QSI042) Approval

Description Work Order Deviation

Disposition

Completed By

Lead hand / Supervisor Approval Verification

QC / QA Coordinator Approval

Root Cause

Environment	☐	☐	No Re-verification
Design	☐	☐	Operator
Doc/Data	☐	☐	Offset/Setup
Equip/Tooling	☐	☐	Supplier
Handling/Pre	☐	☐	Training
Material	☐	☐	Use for Testing
Internal Transport	☐	☐	Poor Information
Tribal Knowledge	☐	☐	Rushing
LOA	☐	☐	Product Improvement
Substation	☐	☐	Process Improvement
Past Expiry Date	☐	☐	Manufacturing Process
Misidentified	☐	☐	Past Due

FAULT CATEGORY

☐ Pressure/Forced	☐ Temperature/Cure	☐ Power Loss/Surge	☐ Positioned Wrong
☐ Bending	☐ Set-up	☐ Folio/Program	☐ Outside Dimensions
☐ Centre Not Concentric	☐ BOM/Route	☐ Grain	☐ Over/Under tolerance
☐ Cracks	☐ Broken/Damage/Defect	☐ Weld	☐ Part Incorrect
☐ Crimp/Kink/Ripple/Wave	☐ Inspection Incomplete/Unqualified	☐ Wrong Stock Pulled	☐ Part Lost/Missing
☐ Cuffs	☐ Contamination	☐ Out of Sequence	☐ Part Moved
☐ Crushing	☐ Countersink	☐ Off-set	☐ Drawing
☐ Heat Treat	☐ Cut Too Short	☐ Mislabeled	☐ Finish
☐ Wave/Twist in Tube	☐ Instructions Incomplete/Unclear	☐ Fit/Function	☐ Misread
☐ Marks/Chatter	☐ Drill Holes	☐ Misaligned/off center	☐ Turning Sequence

☐ OTHER :

DART AEROSPACE

Dart Aerospace Ltd.
1270 Aberdeen St
Hawkesbury, ON
K6A 1K7
Canada

Tel (613) 632-5200

PURCHASE ORDER
PO038921

Supplier: ATG001-VC
A.T.G. Industries Inc
731 INDUSTRIELLE ROAD
ROCKLAND
ON
K4K 1T2 Canada
Phone 613-446-4544
Fax 613-446-4556

Attention: Lalande, Marc-Andre

Ship To: 1270 Aberdeen Street
Hawkesbury
ON
K6A 1K7 Canada
Phone 613-632-5200

PO No: PO038921
PO Date: 1/31/18
Due Date: 2/9/18
Purchase Order Revision:
Revision Date:
Ship-To Contact: Baker, DianePhone
dbaker@dartaero.com

E-MAILED FEB 06 2018

Via: Ground
Pymt Terms: Net 30
Freight Terms:
Special Comments:

Items

Line Item	Job	Part	Description	Status	Due Date	Order Quantity	Received Quantity	Balance	Unit Price (CAD)	Extended Price
1	170477	646.3812	Gusset Bracket Issue P/O to ATG: _____ Hard Anodize Black and Prime as Per Dwg 646.3800	Firmed	2/16/18	24 pcs	0 pcs	24 pcs	$7.22/pcs	$173.28
2	167748	D4970-3	Windshield Deflector - Upper Issue P/O to ATG: _____ Hard Anodize, Color Black and Prime as per Dwg D4970 Rev. C	Firmed	2/16/17	1 pcs	0 pcs	1 pcs	$35.87/pcs	$35.87
3	167750	D4822-2	Upper Right Deflector Hard Anodize, Color Black and Prime as Per Dwg D4822 Rev. C	Firmed	2/16/17	3 pcs	0 pcs	3 pcs	$31.12/pcs	$93.36
4	167751	D4821-1	Windshield Deflector Issue P/O: _____ Hard Anodize, Color Black and Prime as per Dwg D4821 Rev. B	Firmed	2/16/17	8 pcs	0 pcs	8 pcs	$51.37/pcs	$410.96
5	169775	D5227-3	Seat Track Issue P/O: _____ Hard Anodize, Color Black and Prime as per Dwg D5227 Rev. A	Firmed	2/16/17	4 pcs	0 pcs	4 pcs	$32.87/pcs	$131.48
6	169922	RBW109-3101-58-2-3	Hammer Head -Issue P/O to ATG: _____ -ANODIZE COLOR CLEAR, PER IAW MIL-A-8625F TYPE 2 CLASS 1, Water sealant -Certificate of Conformity is required	Firmed	2/9/18	5 pcs	0 pcs	5 pcs	$3.47/pcs	$17.35
7	169924	RBW109-3101-58-2-7	Handle -Issue P/O to ATG: _____ -ANODIZE COLOR CLEAR, PER IAW MIL-A-8625F TYPE 2 CLASS 1, Water sealant -Certificate of Conformity is required	Firmed	2/9/18	4 pcs	0 pcs	4 pcs	$3.47/pcs	$13.88
8	168272	647.0110		Firmed	2/16/18	15 pcs	0 pcs	15 pcs	$44.12/pcs	$661.80

Plex 2/6/18 9:50 AM dart.baker.diane

A.T.G. Industries Inc.
731 Industrielle Street
Rockland, ON K4K 1T2
Canada

Ph: (613) 446-4544 Fax: (613) 446-4556

Pack List

Number: 914688 Date: 28-Feb-18

To

Dart Aerospace Ltd
1270 Aberdeen St
Hawkesbury, ON K6A 1K7

Ph: 613 632-9577 Fax: 613 632-1053

Ship To

Diane Baker
Dart Aerospace Ltd
1270 Aberdeen St
Hawkesbury, ON K6A 1K7

Ph: 613 632-9577 Fax: 613 632-1053

Terms	Ship Via
	OUR TRUCK

Quantity	Description
3 ea	Part: D4822-2 Rev: C Upper Right Deflector Hard Black Anodize per MIL-A-8625F, Type III, Class 2, .0005-.0045" (.5 - 4.5mils) Prime per MIL-PRF-23377, Type I, Class N (Customer Supplied), .0001-.0002" (1 - 2 mils) per drawing. Job: 22463 PO: PO038921 Line: 3
7 ea	Part: 647.0110 Rev: A Roof Doubler Hard Black Anodize per MIL-A-8625F, Type III, Class 2, .0005-.0045" (.5 - 4.5mils) Prime per MIL-PRF-23377, Type I, Class N (Customer Supplied), .0006-.0009" (.6 - .9 mils) per drawing. Job: 22468 PO: PO038921 Line: 8

CERTIFICATE OF CONFORMANCE
A.T.G Industries Inc. certifies that all items in this shipment conform to the requirements.

Date: 28/2/18

Certified Signature: [signature]

Receiver Signature: _____

A.T.G Industries Inc. is AS9100 Registered and Nadcap Chemical Processing Accredited.

Note: This Packing Slip may contain parts that have been PLATED. Items that are plated may be subject to natural tarnishing and it is suggested that they be inspected within 24 hours of receipt.

Made in Canada.